HRS-400用WAP-07外形図

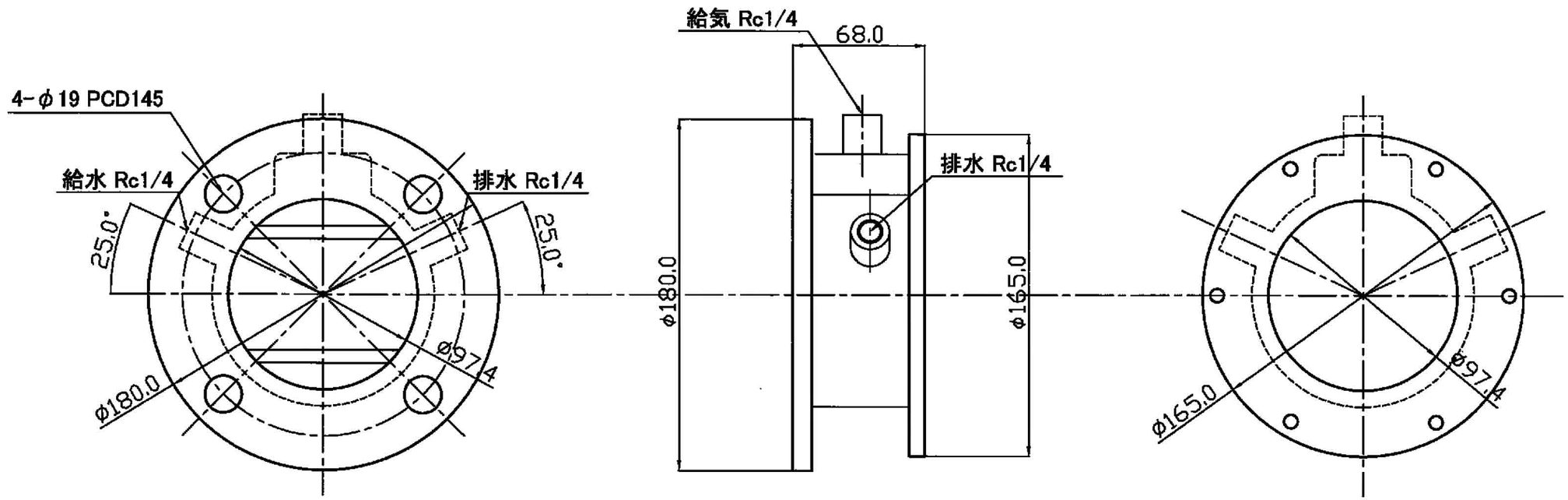

TITLE	HRS-400用WAP-07外形図		
MODEL NO.	WAP-07		
DRAWING NO.		DATE D. M. Y.	21.08.2012
SCALE	not to scale	SECURITY JAPAN co.,ltd	